Final Exam Answers

ASP/CSP/OHST Math Review
Final Examination
16 March 2006

1. During an accident investigation, an engineer, reviewing the damaged structure, estimated that approximately 550,000 ft-lbs/sec^2 of force had impacted into a store's structure. If the car had a mass of 2800 lbs, how fast in miles per hour must the car have traveled when it crashed?
   a. 20.5 mph
   b. 13.5 mph
   c. 32.2 mph
   d. 1.0 mph

2. Using a colorimetric detection tube for toluene, you took the following measurements at this tank farm: 1.4 ppm, 3.4 ppm, 5.4 ppm, 2.4 ppm, 5.2 ppm. What is the standard deviation of this data set?
   a. 2.3
   b. 4.5
   c. 1.7
   d. 33.2

3. Based upon the following design, how much force is needed to lift the object weighing 550 lbs, if the small pulley has a diameter of 12 inches, and the large pulley has a diameter of 32 inches with a 12 inch handle?

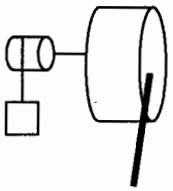

   a. 110 lbs
   b. 200 lbs
   c. 122 lbs
   d. 150 lbs

4. During an accident investigation, a vehicle created 145 feet of braking skids on asphalt having a coefficient of friction of 0.34, 45 feet of skid on grass having a coefficient of friction of 0.45, and 24 feet skid on gravel having a coefficient of friction of 0.17 before hitting a house. What was the vehicle's estimated speed?
   a. 22 mph
   b. 55 mph
   c. 34 mph
   d. 47 mph

5. A ramp with a 15 degree incline angle must be used to push a 550 lb load. If the ramp has a coefficient of friction of 0.37, how much additional force must be added to keep the component from slipping?
   a. ~~129 lbs~~ 0 lbs
   b. 110 lbs
   c. 90 lbs
   d. 120 lbs

6. A safety specification on a contract requires that the maximum load on a line required for this particular job must be 32,000 lbs. If your company is using a mobile crane with a coefficient of friction of 0.32, and 6 parts of line, what is the maximum weight of a load allowed to be lifted at one time?

a. 24,522 lbs
b. 36,296 lbs
c. 22,232 lbs
d. 13,222 lbs

7. A set of safety specifications calls for full-face respirators with Assigned Protection Factor (APF)of 50 when working around these hydrogen cyanide tanks. If the hydrogen cyanide Permissible Exposure Limit (PEL) for an 8-hour Time Weighted Average is 10 part per million, what is the maximum allowed concentration in the air when working around these tanks using full-face respirator with this assigned APF?

a. 100 ppm
b. 230 ppm
c. 500 ppm
d. 600 ppm

8. You are trying to determine an appropriate laser thermometer when doing food inspections. Measuring six types of hot food entrees in a galley, laser thermometer #A had a mean detection of 145 degrees Fahrenheit with a Standard Deviation of 4.5 degrees Fahrenheit. Measuring at the same time the same hot food entrees, Laser thermometer#B had a mean detection of 155 degrees Fahrenheit with a Standard Deviation of 6.3 degrees Fahrenheit. Which laser thermometer would you recommend?

a. Laser Thermometer A
b. Laser Thermometer B
c. Either One – Same Accuracy

9. In a large workshop, Chemical A is used for stripping off old paint, and it contains 99.99% toluene. According to the MSDS, it releases about 1.2 pints of vapor every 60 minutes. You want to avoid wearing respirators due to a union contract dispute. Therefore, if you want to reduce the vapor concentration to the Threshold Limit Value (TLV) of 50 ppm, how much ventilation is required in cubic feet per minute? Use a Safety Factor 2. Molecular Weight of Toluene is 92.1, and Specific Gravity is 0.87.

a. 2,323 cfm
b. 1,341 cfm
c. 3,046 cfm
d. 4,345 cfm

10. An eager truck driver is told to tow, using his work truck, a fully loaded water trailer. The water trailer is carrying 1000 gallons of water. Assuming a 7200 lb towing capacity, can this truck safely tow this water trailer? Weight Density of water is 62.4 lbs per cubic feet

a. Yes, the towed load is 2223 lbs
b. No, the towed load is 8315 lbs
c. No, the towed load is 9500 lbs
d. Yes, the towed load is 1043 lbs

11. A noise survey measuring a generator at ½ feet distance was averaging 112.3 decibels. What is the minimum noise safe area should you designate to where hearing protection is ~~required~~? NOT REQUIRED AT 85dBA?

11.6'

12. Using the following pulley design, how much force is line b exerting to maintain a balance in the system? Assume frictionless pulleys.

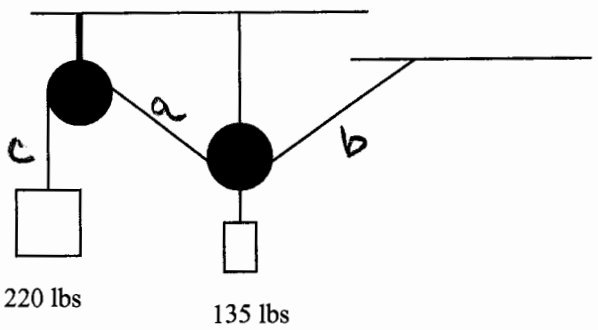

13. Using the following circuit diagram, what is the voltage?

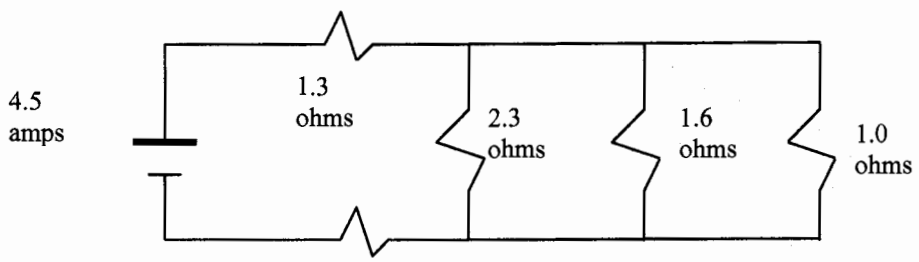

17.6 volts

14. Your IH consultant takes a full-period, continuous single sample of a substance, whose PEL is 200 parts per million. The lab analysis records a value of 210 ppm, but according to OSHA references, the lab/sampling error is 0.25. Is there an overexposure at this workplace?

MAY BE

15. You have in your company hundreds of mobile cranes of the same make/model. You have been tracking the breakage rates of your pulleys. The mean breakage rate is 245 hours of usage. Assuming a normal standard distribution of the data measured, what is the probability of your pulleys failing between 180 hours to 260 hours of usage? STD DEV = 100 HRS

33.7% PROBABILITY

FINAL EXAM

① $KE = \frac{mv^2}{2}$

$\frac{550{,}000 \text{ ft}\cdot\text{lbs}^2}{\text{sec}} = \frac{(2800 \text{ lbs})\, v^2}{2}$

$19.8 \text{ fps} = V \qquad \frac{19.8 \text{ ft}}{\text{sec}} \times \frac{3600 \text{ sec}}{1 \text{ hr}} \times \frac{1 \text{ mi}}{5280 \text{ ft}} = \underline{13.5 \text{ mph}}$

② $\bar{x} = \frac{1.4 + 3.4 + 5.4 + 2.4 + 5.2}{5} = 3.6$

$SD = \sqrt{\frac{(1.4-3.6)^2 + (3.4-3.6)^2 + (5.4-3.6)^2 + (2.4-3.6)^2 + (5.2-3.6)^2}{5-1}}$

$= \sqrt{\frac{(4.84) + (.04) + (3.24) + (1.44) + (2.56)}{4}}$

$= \sqrt{3.03}$

$= \underline{1.7}$

⑤

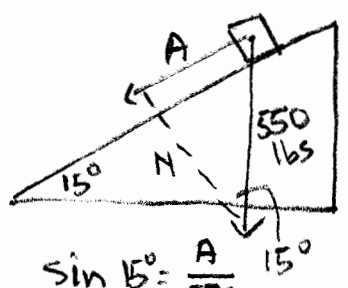

$\sin 15° = \frac{A}{550}$

$142.4 \text{ lbs} = A \qquad \cos 15 = \frac{N}{550}$

$531.3 \text{ lbs} = N$

$F = \mu N$

$= (.37)(531.3) = 196.6 \text{ lbs}$

$142.4 - 196.6 = -54.2$

Frictional FORCE HIGHER THAN A SO NO ADD'L FORCE NEEDED.

③ $F_1 D_1 = F_2 D_2$

$(550)(12) = F(32 + 12)$

$\underline{150 \text{ lb}} = F$

④ $V = \sqrt{30 \times S \times \mu}$

$V_{ASPHALT} = \sqrt{30 \times 145 \times 0.34} = 38.5 \text{ mph}$

$V_{grass} = \sqrt{30 \times 45 \times 0.45} = 24.6 \text{ mph}$

$V_{gravel} = \sqrt{30 \times 24 \times .17} = 11.1 \text{ mph}$

$\sqrt{(38.5)^2 + (24.6)^2 + (11.1)^2} = \underline{47 \text{ mph}}$

(6) $L_L = \frac{LOAD}{n} (1 + F_D)^n$

$32{,}000 = \frac{LOAD}{6} (1 + .32)^6$

$\underline{36{,}296 \text{ lbs}} = LOAD$

(7) $PF = 50 = \frac{x}{10 \text{ ppm}}$

$x = \underline{500 \text{ ppm}}$

(8) $CV_A = 100 \left(\frac{SD}{\bar{x}} \right)$ $CV_B = 100 \left(\frac{SD}{\bar{x}} \right)$

$= 100 \left(\frac{4.5}{145} \right)$ $= 100 \left(\frac{6.3}{155} \right)$

$= \underline{3.10}$ $= \underline{4.06}$

(9) $Q = \frac{403 \times 10^6 \times SG \times ER \times K}{MW \times C}$

$= \frac{403 \times 10^6 \times 0.87 \times \frac{1.2 \text{ pts}}{60 \text{ min}} \times 2}{92.1 \times 50}$

$= \underline{30455 \text{ cfm}}$

(10) $1000 \text{ gal} \times \frac{4 \text{ qt}}{1 \text{ gal}} \times \frac{0.0365 \text{ ft}^3}{1.06 \text{ qt}} = 133.2 \text{ ft}^3$

$133.2 \text{ ft}^3 \times \frac{62.4 \text{ lbs}}{\text{ft}^3} = \underline{8315 \text{ lbs}}$

8315 lbs > 7200 lb
towing
capacity

(11) $dB_1 = dB_0 + 20\log\left(\frac{d_0}{d_1}\right)$

$85\ dBA = 112.3 + 20\log\left(\frac{.5}{x}\right)$

$-27.3 = 20\log .5 - 20\log x$

$21.3 = 20\log x$

$\underline{11.6'} = x$

(12) $\frac{1}{2}(135) = \underline{67.5\ lbs}$

(13) $V = IR$

$\frac{1}{R_{Parallel}} = \frac{1}{2.3} + \frac{1}{1.6} + \frac{1}{1.0} \Rightarrow R = .49\ \Omega$

$R_{series} = 1.3 + 2.1 = 3.4\ \Omega$

$3.9\ \Omega$

$= (4.5)(3.9)$

$= \underline{17.6\ Volts}$

(14) $Y = \frac{X}{PEL} = \frac{210}{200} = 1.05$

$UCL = 0.25 + 1.05 = 1.3$

$LCL = 1.05 - 0.25 = 0.8$

<u>May BE</u> $0.8 < x < 1.3$

(15)

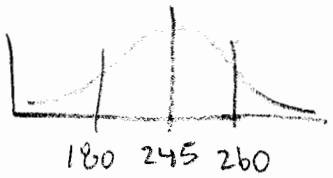

$z = (x_i - x)/SD$

$z_{180} = \frac{|180-245|}{100} = .65 \approx .7 \Rightarrow .2580$

$z_{260} = \frac{|260-245|}{100} = .15 \approx .2 \Rightarrow .0793$

33.7% $.3373$